Change List

File: Change List_sch.kicad_sch

Block Diagram

File: Block Diagram_sch.kicad_sch

nPM2100+nRF54L15

File: nPM2100+nRF54L15_sch.kicad_sch

seeed studio

Sheet: /
File: nPM2100 + nRF54L15 Design Example_V1.0.kicad_sch

Title: nPM2100 + nRF54L15 Design Example	CC BY-SA 4.0
Size: A4 Date: 2025-12-17	**Rev: V1.0**
KiCad E.D.A. 9.0.3	Id: 1/4

Version	Descriptions	Data	Name
V1.0	1.Initial	12/17/2025	seeed studio
V1.1	2.Added comment about passive network component optimization	12/17/2025	Nordic

seeed studio

Sheet: /Change List/
File: Change List_sch.kicad_sch

Title: nPM2100 + nRF54L15 Design Example

CC BY-SA 4.0

Size: A4 | Date: 2025-12-17 | Rev: V1.1

KiCad E.D.A. 9.0.3 | Id: 2/4

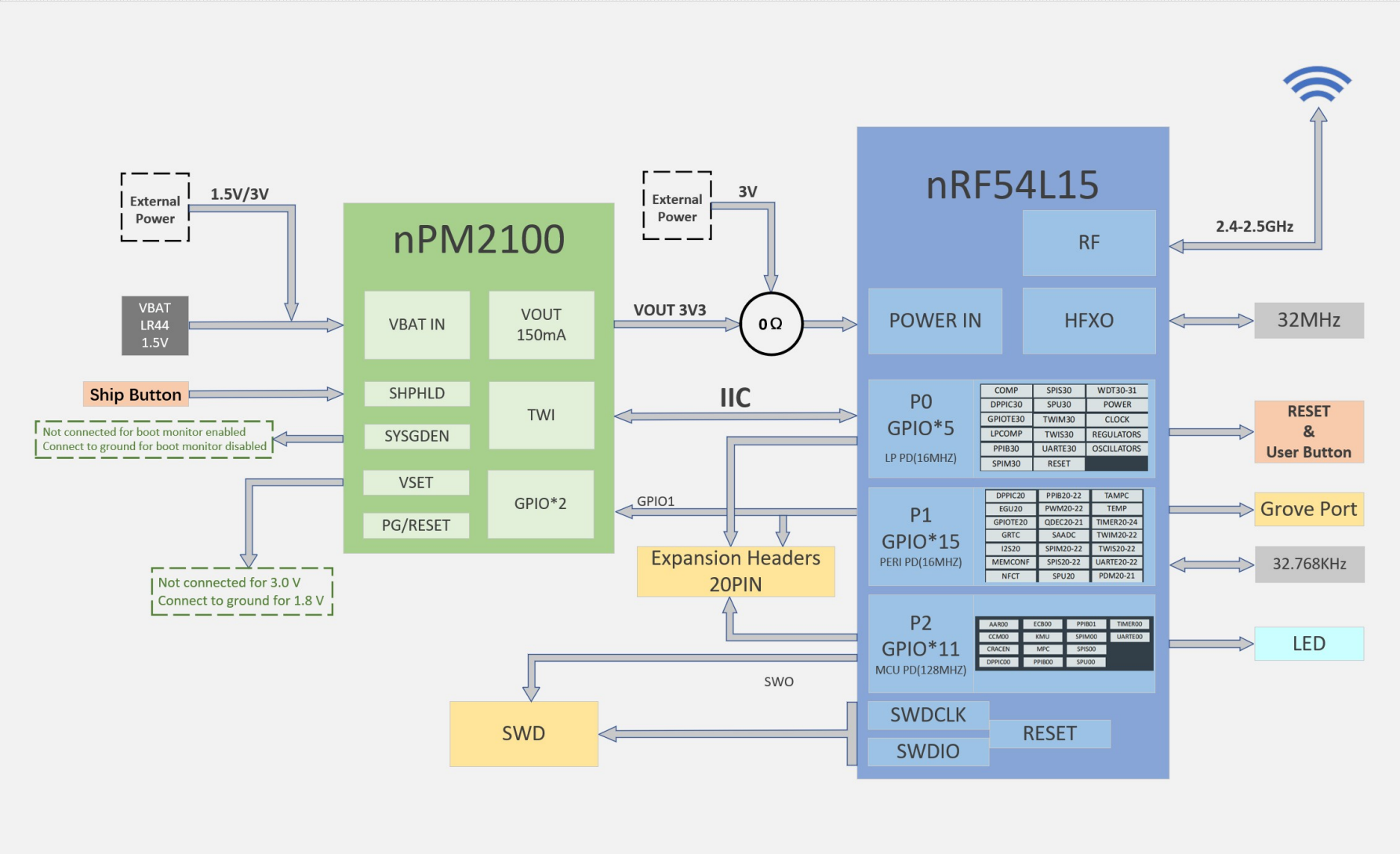

seeed studio

Sheet: /Block Diagram/
File: Block Diagram_sch.kicad_sch

Title: nPM2100 + nRF54L15 Design Example

CC BY-SA 4.0

Size: A4 | Date: 2025-12-17 | Rev: V1.0

KiCad E.D.A. 9.0.3 | Id: 3/4

PMIC nPM2100

Value (I)	Value	Description
		Output voltage setting [VOUT=1.8V+(VS*0.05)], legal range: 0-30]
1V8	0	1.8 V (default)
3V3	30	3.3 V

Note:
-VSET is not connected to the output 3V;
-The output voltage can be adjusted via software in increments of 50 mV up to 3.3 volts.

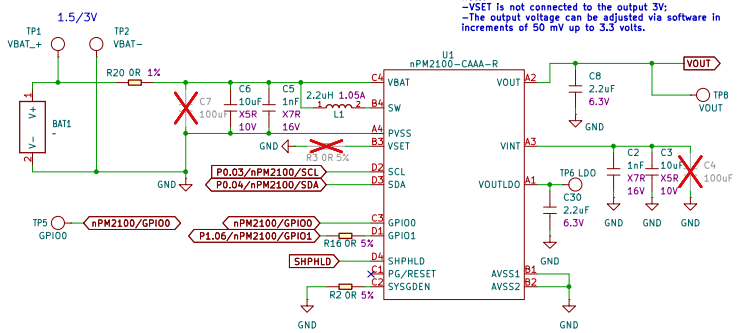

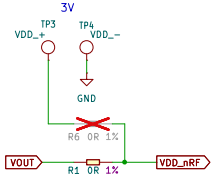

nRF54L15

This design is based on the Reference Design for nPM2100 and Reference design for nRF54L15 SOC. Note that the values of the passive components for the RF compensation network have been updated in order to optimize performances for this specific board design

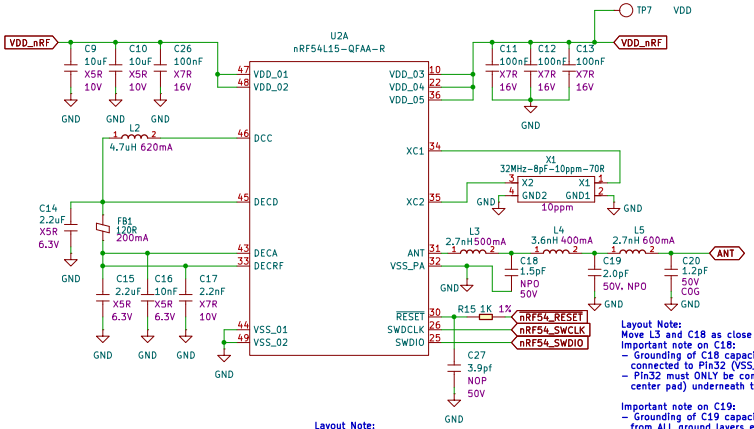

Layout Note:
Move R15 and C27 as close to the reset pin as possible

Layout Note:
Move L3 and C18 as close to the nRF54L15 as possible.
Important note on C18:
- Grounding of C18 capacitor must ONLY be connected to Pin32 (VSS_PA) in top layer.
- Pin32 must ONLY be connected to Pin49 (VSS center pad) underneath the IC package.

Important note on C19:
- Grounding of C19 capacitor MUST be isolated from ALL ground layers except the bottom ground layer.

nRF54L15 GPIO

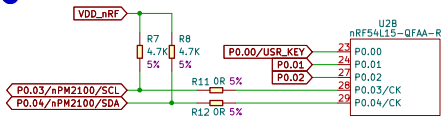

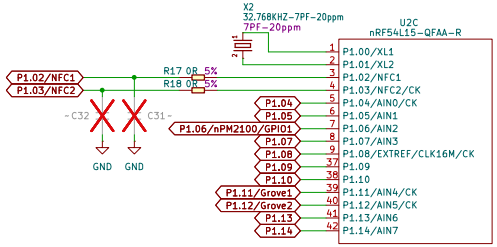

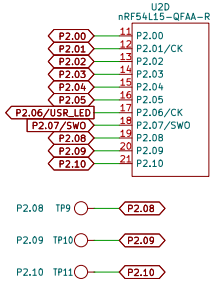

ANT

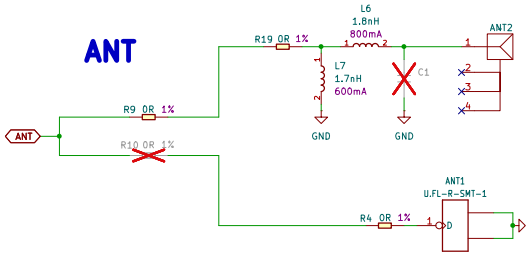

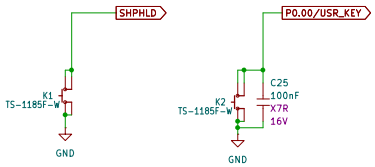

Key

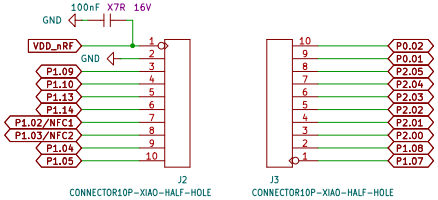

Header

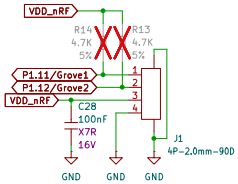

Grove

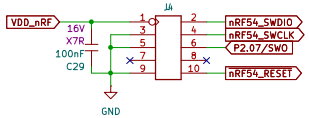

SWD

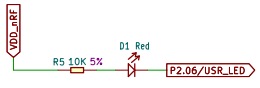

LED

PWR_FLAG
GND

seeed studio

Sheet: /nPM2100+nRF54L15/
File: nPM2100+nRF54L15_sch.kicad_sch

Title: nPM2100 + nRF54L15 Design Example		CC BY-SA 4.0
Size: A3	Date: 2025-12-17	Rev: V1.1
KiCad E.D.A. 9.0.3		Id: 4/4